Magnetica	**Product Technical Specification**	*Code* : **04512**
	Switch Mode Transformer 3.5W 115kHz 1.73mH	*Class Code* : **1921.0005**
Date : 11.11.2008	*Revision*: 1	Page 1 of 2

APPLICATION

TRANSFORMER FOR FLYBACK POWER SUPPLIES

ELECTRICAL SCHEME

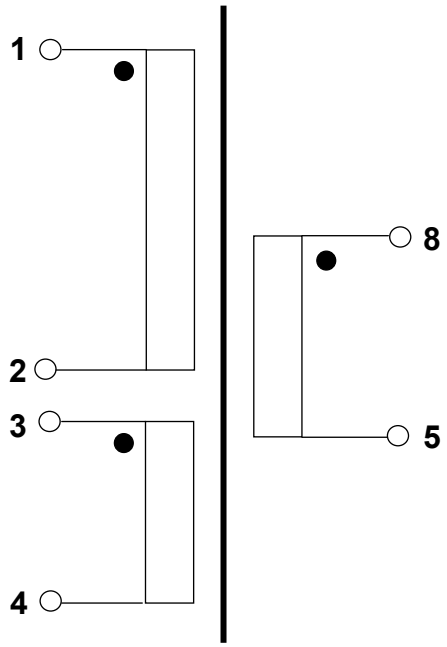

TECHNICAL SPECIFICATIONS

INDUCTANCE
(*TEST CONDITION:1kHz, TA 20°C)*

PIN 1-2	1.73 mH ±15%
PIN 4-3	20.6 uH ± 15%
PIN 8-5	115 uH ± 15%

RESISTANCE
(*TEST CONDITION: D.C, TA 20°C)*

PIN 1-2	4.57 Ω MAX
PIN 4-3	578 m Ω MAX
PIN 8-5	550 m Ω MAX

TRANSFORMER RATIO
(*TEST CONDITION: 10kHz, TA 20°C)*

PIN 1-2 ⇔ 4-3	9.28 ± 5%
PIN 1-2 ⇔ 8-5	3.93 ± 5%

LEAKAGE INDUCTANCE 2.76 % NOM
(TEST CONDITION: PIN 1-2, 3-4-5-8 S.C., F 10kHz, TA 20°C)

PARASITIC CAPACITANCE 19 pF NOM
(MEASURE 1-2, F 1MHz, TA 20°C)

SATURATION CURRENT 0. 21 A_P MAX
(TEST CONDITION: 1-2, B_{SAT} 0.23T , TA 20°C)

OPERATING CURRENT 0.2 A_P MAX
(TEST CONDITION: 1-2, P_{MAX} 3.5W*, F* 115kHz*, TA 20°C)*

OPERATING FREQUENCY 115kHz MAX
(P_{MAX} 3.5W*, TA 20°C)*

AMBIENT TEMPERATURE RANGE -20°C÷+45°C
(P_{MAX} 3.5W, WITH SELF TRISE 45°C)

THERMAL CLASS B

STORAGE TEMPERATURE RANGE -20°C÷+85°C

INSULATION PRIMARY / SECONDARY 4kV
(F 50Hz,TIME 2", TA 20°C)

MAX DIMENSIONS 15x17 H15 mm

WEIGHT 1g ABOUT

PIN FUNCTION

PIN (*)	*FUNCTION*		*PIN (*)*	*FUNCTION*	
1	PRIMARY DRAIN		5	SECONDARY GROUND	+30V 100mA
2	PRIMARY +VB		6	NOT PRESENT	
3	AUXILIARY	12V 10mA	7		
4	AUXILIARY GROUND		8	SECONDARY	

(*)PINS THAT HAVE THE SAME LETTER HAVE TO BE CONNECTED TOGETHER IN THE CIRCUIT BOARD

Magnetica
Electromagnetic components
Switch mode power supply
Via Marcora, 20 60022 Castelfidardo (AN)
Tel +39 071 7823855 www.magnetica.eu

Copyright Magnetica, cannot be reproduced even partially without written authorization

DRAWING

QUOTES IN MILLIMETERS, DRAWING NOT IN SCALE

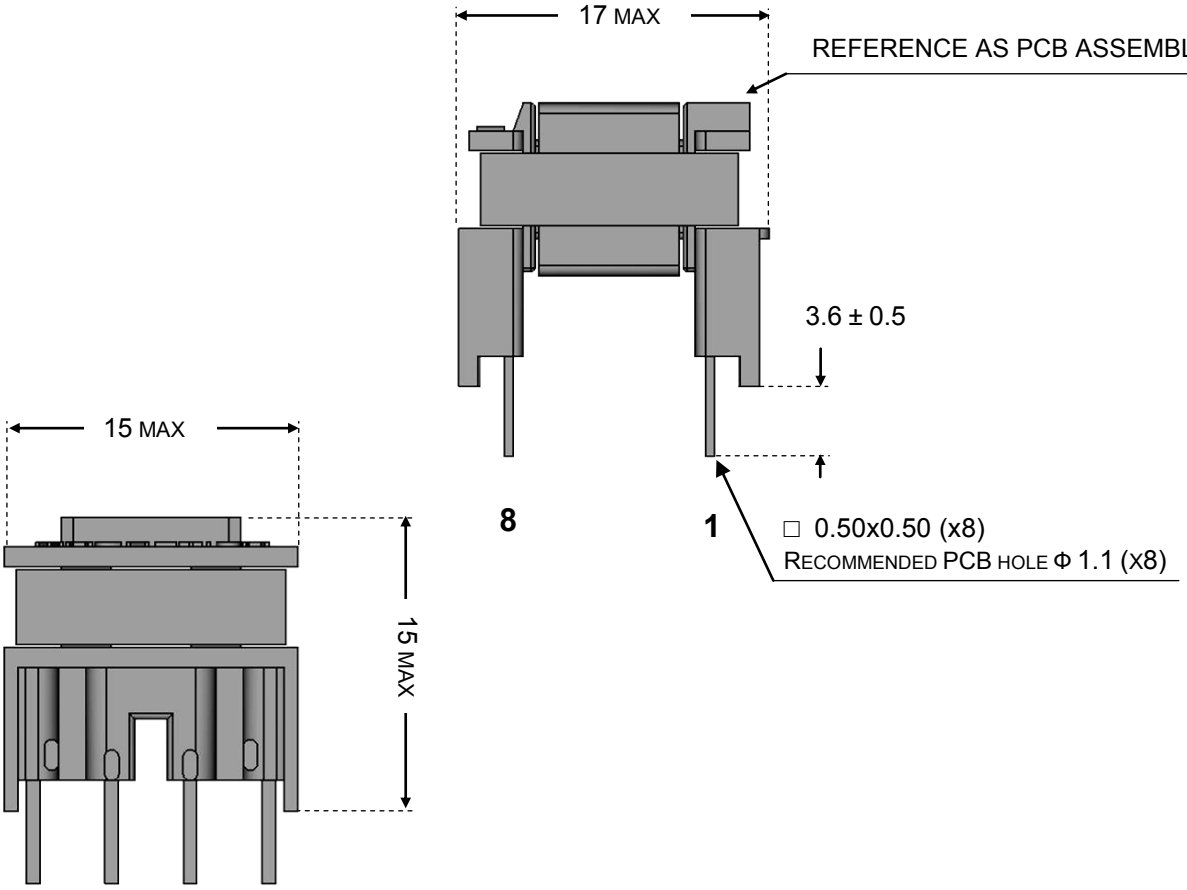

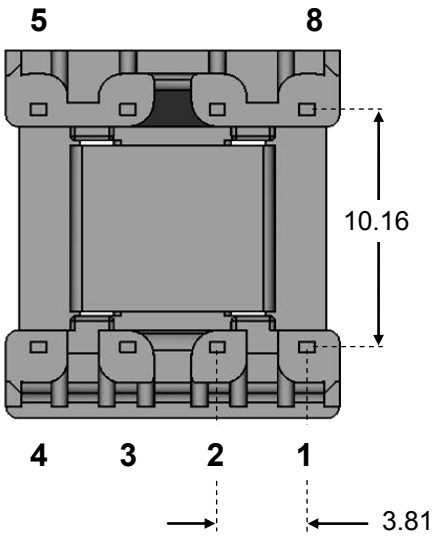

BOTTOM VIEW (PIN SIDE)

RoHS Compliant

Copyright Magnetica, cannot be reproduced even partially without written authorization